Certificate No. : T-0071

ELECTRICAL RESEARCH AND DEVELOPMENT ASSOCIATION
(Accredited by the National Accreditation Board for Testing and Calibration Laboratories, Govt. of India)
ERDA Road, Makarpura Industrial Estate, Vadodara-390 010, India.
EPABX : +91 (0265) 2642942, 2642964, 2642377, 3043128 / 29 / 30 / 31 / 33
Fax : +91 (0265) 2638382
E-mail : erda@erda.org
Web : http://www.erda.org

TEST REPORT

NAME & ADDRESS OF CUSTOMER	REPORT NO.: RP-1516-042833 DATE: 03.02.2016	
PRIMA AUTOMATION (INDIA) PVT. LTD. Plot No. 793, Rakanpur, Santej, Gandhinager, Kalol, Gujarat India - 382721.	**CUSTOMER REF. NO.:** NIL	**DATED:** 16.01.2016
	DATE OF SAMPLE RECEIPT:	**DATE OF TESTING:**
	25.01.2016	29.01.2016

SAMPLE DESCRIPTION

PCC CUM MCC ELECTRICAL CONTROL PANEL

Rated Voltage : 690 V
Rated Current : 2000 A
Rated Frequency : 50/60 Hz
Rated insulation voltage (Ui) : 1000 V
No. of Phases: TPN+E

Rated short time withstand current & its duration :

- 50 kArms for 1 sec. with an initial peak of 105 kA between phases (Incoming ACB+HBB)
- 30 kArms for 1 sec. with an initial peak of 63 kA between nearest phase & Neutral(Incoming ACB+HBB)
- 50 kArms for 1 sec. with an initial peak of 105 kA between phases (Incoming ACB+VBB)
- 30 kArms for 1 sec. with an initial peak of 63 kA between nearest phase & Neutral(Incoming ACB+VBB)

Quantity (Tested): 1 No.

Further details as per sheet No. 3 OF 5

SAMPLE IDENTIFICATION

ERDA IDENTIFICATION NO.:
ERDA-00125253

TYPE DESIGNATION:
LTPCC CUM PMCC Panel

DRAWING NO.:
DSN-ITEM008384 PAGE NO:- 01 of 06,
DSN-ITEM008384 PAGE NO:- 02 of 06,
DSN-ITEM008384 PAGE NO:- 03 of 06,
DSN-ITEM008384 PAGE NO:- 04 of 06,
DSN-ITEM008384 PAGE NO:- 05 of 06,
DSN-ITEM008384 PAGE NO:- 06 of 06.

TEST DETAILS

Verification of the short circuit withstand strength [Cl. No. 8.2.3.2.3 (b) & (d)]

TEST SPECIFICATIONS

As per customer's requirement, test procedure followed as per IS 8623 (Part 1): 1993 / IEC Pub. 439 – 1 (1985)

ENCLOSURES:

NUMBER OF OSCILLOGRAM	: Two
NUMBER OF PHOTOGRAPH	: One
NUMBER OF TEST CIRCUIT DIAGRAM	: Two
NUMBER OF DRAWINGS	: Six

TEST WITNESSED BY: Mr. Vaibhav Kothari [Sr. Design Engg., Prima Automation (India) Pvt. Ltd.]
Mr. Pulkit Thakkar [Project Manager, Prima Automation (India) Pvt. Ltd.]

REMARKS: The sample **conforms** to the requirements of verification of the short-circuit withstand strength as specified by customer.

S.V. Patel		(YASHINKHAN I. PATHAN)
PREPARED BY	**CHECKED BY**	**APPROVED BY**

NOTE:
1. This report relates only to the particular sample received for testing in good condition at ERDA.
2. This report cannot be reproduced in part under any circumstances.
3. Publication of this report requires prior permission in writing from Director, ERDA.
4. Only test asked by customer have been carried out.
5. In case of any dispute, Vadodara will be the exclusive jurisdiction & shall be construed as where the cause has arised.

Caution: ERDA is not responsible for the authenticity of photocopied or reproduced test reports.
ERDA provides support to customers for verification of the authenticity of test reports issued by ERDA.

Short Circuit Laboratory

TE 1813442

Certificate No. : T-0071

ELECTRICAL RESEARCH AND DEVELOPMENT ASSOCIATION
(Accredited by the National Accreditation Board for Testing and Calibration Laboratories, Govt. of India)
ERDA Road, Makarpura Industrial Estate, Vadodara-390 010, India.
EPABX : +91 (0265) 2642942, 2642964, 2642377, 3043128 / 29 / 30 / 31 / 33
Fax : +91 (0265) 2638382
E-mail : erda@erda.org
Web : http://www.erda.org

REPORT NO.: RP-1516-042833
DATE: 03.02.2016

Contents	
Technical specification of test object assigned by customer	Sheet No. 3 of 5
Verification of the short-circuit withstand strength	Sheet No. 4 of 5
Test results after Verification of the short-circuit withstand strength	Sheet No. 5 of 5
Oscillogram No.	600/01 to 600/05
Photograph No.	1516-018087-386
Test circuit diagram No.	OLSC/SWG/47 OLSC/SWG/49
Drawing No.	DSN- ITEM008384 PAGE NO:- 01 of 06, DSN- ITEM008384 PAGE NO:- 02 of 06, DSN- ITEM008384 PAGE NO:- 03 of 06, DSN- ITEM008384 PAGE NO:- 04 of 06, DSN- ITEM008384 PAGE NO:- 05 of 06, DSN- ITEM008384 PAGE NO:- 06 of 06.

S.V.Patel
PREPARED BY

CHECKED BY

TE 18134441

Short Circuit Laboratory

Certificate No. : T-0071

ELECTRICAL RESEARCH AND DEVELOPMENT ASSOCIATION
(Accredited by the National Accreditation Board for Testing and Calibration Laboratories, Govt. of India)
ERDA Road, Makarpura Industrial Estate, Vadodara-390 010, India.
EPABX : +91 (0265) 2642942, 2642964, 2642377, 3043128 / 29 / 30 / 31 / 33
Fax : +91 (0265) 2638382
E-mail : erda@erda.org
Web : http://www.erda.org

REPORT NO.: RP-1516-042833
DATE: 03.02.2016

TECHNICAL SPECIFICATION OF TEST OBJECT ASSIGNED BY CUSTOMER

1. Name of manufacturer : **PRIMA AUTOMATION (INDIA) PVT. LTD.**
2. Equipment : PCC CUM MCC ELECTRICAL CONTROL PANEL
3. Standard reference : As per customer's requirement, test procedure followed as per IS 8623 (Part 1):1993/IEC Pub. 439-1 (1985)
4. Rated voltage : 690 V
5. Rated current : 2000 A
6. Rated insulation voltage (Ui) : 1000 V
7. Type designation : LT PCC CUM MCC PANEL
8. Rated frequency : 50 Hz / 60 Hz
9. No. of Phases : TPN+Earth
10. Rated short time withstand current & its duration:
    - 50 kArms for 1 sec. with an initial peak of 105 kA between phase (HBB+ACB)
    - 30 kArms for 1 sec. with an initial peak of 63 kA between adjacent phase (B) of (HBB+ACB) nearest phase & neutral
    - 50 kArms for 1 sec. with an initial peak of 105 kA between phase (VBB+ACB)
    - 30 kArms for 1 sec. with an initial peak of 63 kA between adjacent phase (B) of (VBB+ACB) nearest phase & neutral

    Main Horizontal busbars
    (2 x 125mm x 10mm Aluminum busbars per phase)
    (1 x 125mm x 10mm Aluminum busbars for neutral)

    Main Vertical busbars
    (1 x 75mm x 10mm Aluminum busbars per phase)
    (1 x 75mm x 6mm Aluminum busbars for neutral)

    Main Horizontal Busbar to ACB Vertical Busbar
    (2 x 100mm x 12.5mm Aluminum busbars per phase)
    (1 x 100mm x 12.5mm Aluminum busbars for neutral)
11. Details Of Incoming Air Circuit Barker:
    - Id Number : 000491280911130
    - Rated Voltage (Ue) : 690 V
    - Rated Insulation Voltage (Ui) : 1000 V
    - Type Designation : 3WL1225-3DG32-4GA2
    - Rated Impulse Withstand Voltage (Uimp) : 12 kVp
    - No Of Poles : Three
    - Rated Current (In) : 2500A
    - Frequency : 50/60 Hz
    - Icu = Ics : 75 kA @ 690 V
    - Icw : 75 kArms for 0.5sec.
    - Make : Siemens
12. Quantity (Tested) : 1 No.

S.V.Patel
PREPARED BY

CHECKED BY

Short Circuit Laboratory

TE 18134440

Certificate No. : T-0071

ELECTRICAL RESEARCH AND DEVELOPMENT ASSOCIATION
(Accredited by the National Accreditation Board for Testing and Calibration Laboratories, Govt. of India)
ERDA Road, Makarpura Industrial Estate, Vadodara-390 010, India.
EPABX : +91 (0265) 2642942, 2642964, 2642377, 3043128 / 29 / 30 / 31 / 33
Fax : +91 (0265) 2638382
E-mail : erda@erda.org
Web : http://www.erda.org

REPORT NO.: RP-1516-042833
DATE: 03.02.2016

VERIFICATION OF THE SHORT-CIRCUIT WITHSTAND STRENGTH

[Sub Cl. No. 8.2.3.2.3 (b)]
Condition of the equipment under test: New

The verification of the short-circuit withstand strength test was performed on the sample connected to source as per test circuit diagram No.: OLSC/SWG/47 & 49. The sample was connected to earth through fine wire fuse.

- For Incoming ACB + HBB Three phase test: Source Point X1 & Star point X2 as per Drg. No. ITEM008384 Page No:- 02 of 06.

- For Incoming ACB + VBB Three phase test: Source Point X1 & Star point X2 as per Drg. No. ITEM008384 Page No:- 02 of 06.

- For Incoming ACB + HBB Single phase test: Sourcc Point X1 & Star point X3 as per Drg. No. ITEM008384 Page No:- 02 of 06.

- For Incoming ACB + VBB Single phase test: Source Point X1 & Star point X3 as per Drg. No. ITEM008384 Page No:- 02 of 06.

NOTE: All the releases of ACB were disable before the test.
Condition of the equipment under test: New
Supply Frequency: 50 Hz

Oscillo-gram No.	Short circuit current (kA)			Duration (sec.)	Observation During test	Remarks
	Peak	Rms	Average			
600/01	- - 108.781	50.474 50.806 50.951	50.744	1.004	No abnormality	3- Phases test (Incoming ACB + HBB) (Short time and peak withstand current test)
600/02	106.647 - -	51.624 50.658 50.507	50.930	1.019	No abnormality	3- Phases test (Incoming ACB + VBB) (Short time and peak withstand current test)
600/03	63.205	30.389	-	1.014	No abnormality	1- Phase test (Incoming ACB + VBB) (B-phase & neutral) (Short time and peak withstand current test)
600/04	63.271	-	-	0.103	No abnormality	1- Phase test (Incoming ACB+ HBB) (B-phase & neutral) (Dynamic peak test)
600/05	-	30.093	-	1.007	No abnormality	1- Phase test (Incoming ACB+ HBB) (B-phase & neutral) (Short time withstand current test)

Observations after test:
- No abnormality was observed.
- Busbar connections were not loosened.
- No deformation in busbars.
- Busbar supports were intact.
- Fine wire fuse in earth circuit found intact.

S.V. Patel
PREPARED BY

CHECKED BY

Short Circuit Laboratory

TE 18134439

Certificate No. : T-0071

ELECTRICAL RESEARCH AND DEVELOPMENT ASSOCIATION
(Accredited by the National Accreditation Board for Testing and Calibration Laboratories, Govt. of India)
ERDA Road, Makarpura Industrial Estate, Vadodara-390 010, India.
EPABX : +91 (0265) 2642942, 2642964, 2642377, 3043128 / 29 / 30 / 31 / 33
Fax : +91 (0265) 2638382
E-mail : erda@erda.org
Web : http://www.erda.org

REPORT NO.: RP-1516-042833
DATE: 03.02.2016

TEST RESULTS AFTER VERIFICATION OF THE SHORT- CIRCUIT WITHSTAND STRENGTH

a) INSULATION RESISTANCE TEST

Sr. No.	Test	Test Voltage (V DC)	I.R. Value (MΩ)	
			Required	Measured
1.	Between all live parts and the interconnected exposed conductive parts of the assembly.	500	> 0.5	> 0.5
2.	Between each pole and all the other poles connected for this test to the interconnected exposed conductive parts of the assembly.	500	> 0.5	> 0.5

b) VERIFICATION OF DIELECTRIC PROPERTIES

Sr. No.	Test	Applied Voltage (kV)	Duration (Sec.)	Remarks
1.	Between all live parts and the interconnected exposed conductive parts of the assembly.	3.5	60	Withstood
2.	Between each pole and all the other poles connected for this test to the interconnected exposed conductive parts of the assembly.	3.5	60	Withstood
3.	Between all live parts and the exposed conductive parts of the assembly with ACB in closed position.	1	60	Withstood
4.	Between each pole and all other poles connected to the exposed conductive parts of the assembly with ACB in closed position.	1	60	Withstood

S.V.Patel
PREPARED BY

CHECKED BY

Short Circuit Laboratory

TE 18134438

Certificate No. : T-0071

ELECTRICAL RESEARCH AND DEVELOPMENT ASSOCIATION
(Accredited by the National Accreditation Board for Testing and Calibration Laboratories, Govt. of India)
ERDA Road, Makarpura Industrial Estate, Vadodara-390 010, India.
EPABX : +91 (0265) 2642942, 2642964, 2642377, 3043128 / 29 / 30 / 31 / 33
Fax : +91 (0265) 2638382
E-mail : erda@erda.org
Web : http://www.erda.org

REPORT NO : RP-1516-042833 Date: 03.02.2016

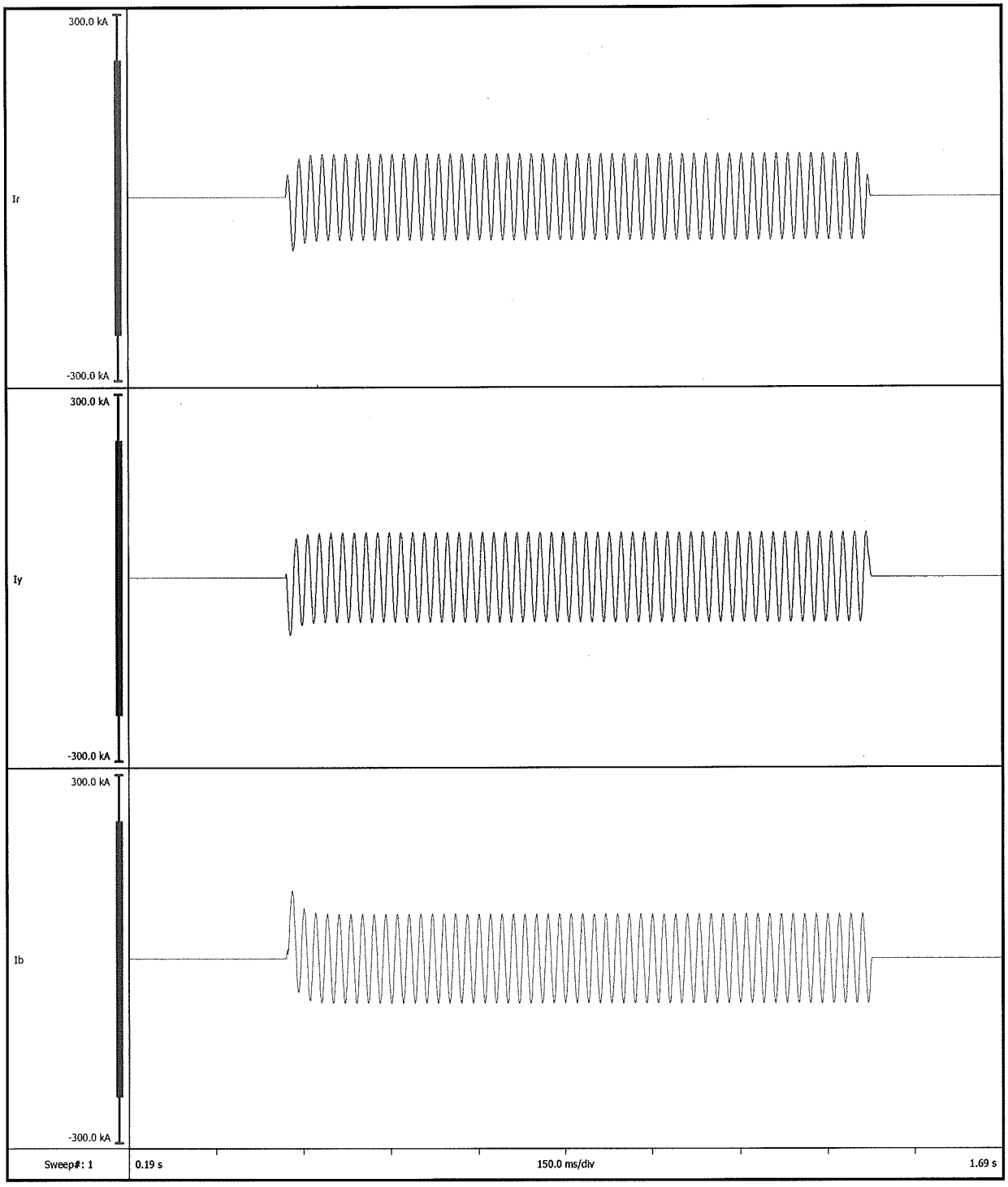

OSCILLOGRAM NO. : 600/01

Short Circuit Laboratory

TE 18113970

Certificate No. : T-0071

ELECTRICAL RESEARCH AND DEVELOPMENT ASSOCIATION
(Accredited by the National Accreditation Board for Testing and Calibration Laboratories, Govt. of India)
ERDA Road, Makarpura Industrial Estate, Vadodara-390 010, India.
EPABX : +91 (0265) 2642942, 2642964, 2642377, 3043128 / 29 / 30 / 31 / 33
Fax : +91 (0265) 2638382
E-mail : erda@erda.org
Web : http://www.erda.org

REPORT NO : RP-1516-042833 Date: 03.02.2016

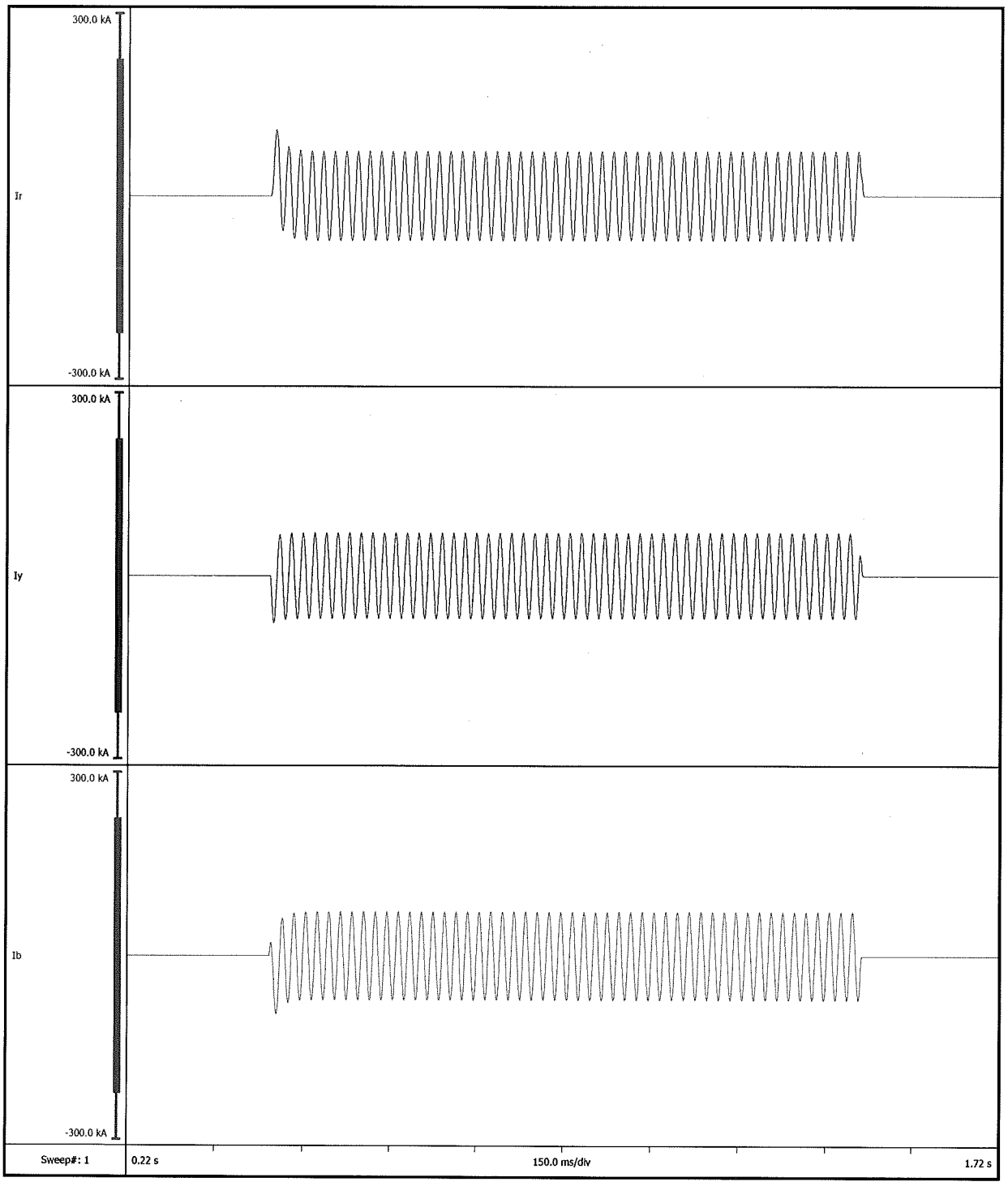

OSCILLOGRAM NO. : 600/02

TE 1813971

Certificate No. : T-0071

ELECTRICAL RESEARCH AND DEVELOPMENT ASSOCIATION
(Accredited by the National Accreditation Board for Testing and Calibration Laboratories, Govt. of India)
ERDA Road, Makarpura Industrial Estate, Vadodara-390 010, India.
EPABX : +91 (0265) 2642942, 2642964, 2642377, 3043128 / 29 / 30 / 31 / 33
Fax : +91 (0265) 2638382
E-mail : erda@erda.org
Web : http://www.erda.org

REPORT NO : RP-1516-042833 Date: 03.02.2016

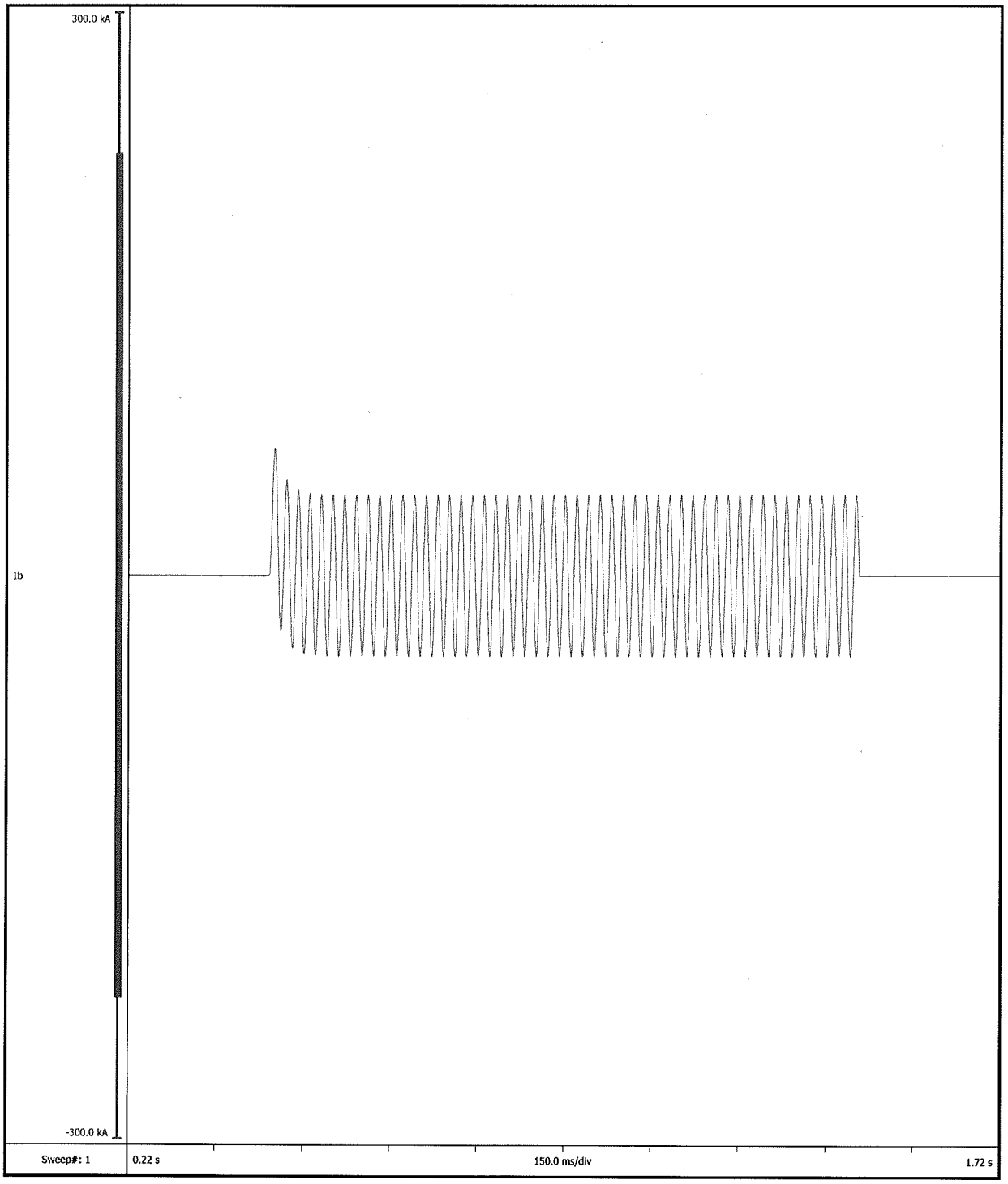

OSCILLOGRAM NO. : 600/03

TE 1813972

Short Circuit Laboratory
S.V. Patel

Certificate No. : T-0071

ELECTRICAL RESEARCH AND DEVELOPMENT ASSOCIATION
(Accredited by the National Accreditation Board for Testing and Calibration Laboratories, Govt. of India)
ERDA Road, Makarpura Industrial Estate, Vadodara-390 010, India.
EPABX : +91 (0265) 2642942, 2642964, 2642377, 3043128 / 29 / 30 / 31 / 33
Fax : +91 (0265) 2638382
E-mail : erda@erda.org
Web : http://www.erda.org

REPORT NO : RP-1516-042833 Date: 03.02.2016

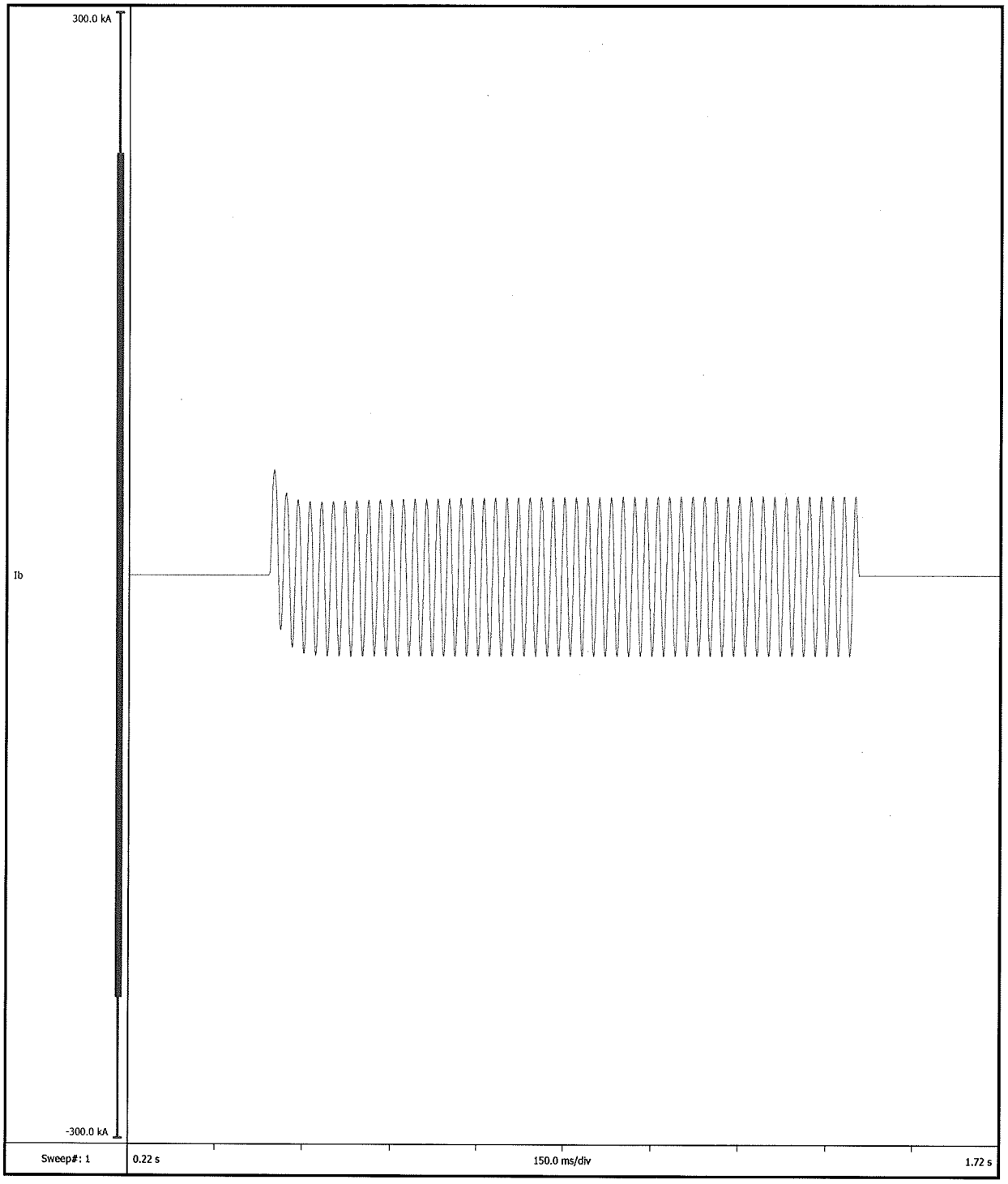

OSCILLOGRAM NO. : 600/04

TE 18113973

Certificate No. : T-0071

ELECTRICAL RESEARCH AND DEVELOPMENT ASSOCIATION
(Accredited by the National Accreditation Board for Testing and Calibration Laboratories, Govt. of India)
ERDA Road, Makarpura Industrial Estate, Vadodara-390 010, India.
EPABX : +91 (0265) 2642942, 2642964, 2642377, 3043128 / 29 / 30 / 31 / 33
Fax : +91 (0265) 2638382
E-mail : erda@erda.org
Web : http://www.erda.org

REPORT NO : RP-1516-042833 Date: 03.02.2016

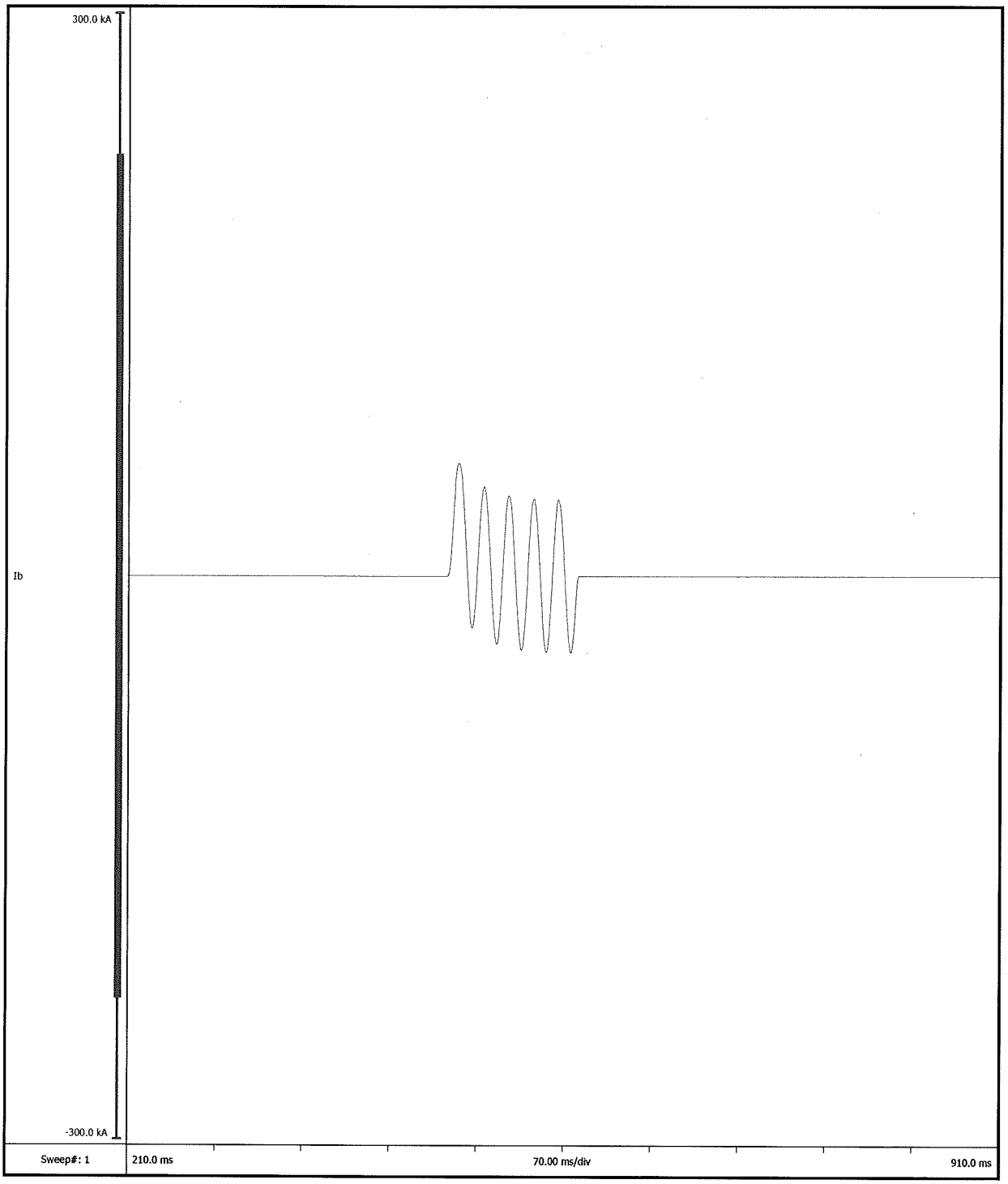

OSCILLOGRAM NO. : 600/05

Short Circuit Laboratory

TE 18113974

Certificate No. : T-0071

ELECTRICAL RESEARCH AND DEVELOPMENT ASSOCIATION
(Accredited by the National Accreditation Board for Testing and Calibration Laboratories, Govt. of India)
ERDA Road, Makarpura Industrial Estate, Vadodara-390 010, India.
EPABX : +91 (0265) 2642942, 2642964, 2642377, 3043128 / 29 / 30 / 31 / 33
Fax : +91 (0265) 2638382
E-mail : erda@erda.org
Web : http://www.erda.org

REPORT NO.:RP-1516-042833 **DATE:** 03.02.2016

S.V. Patel

TE 1813413

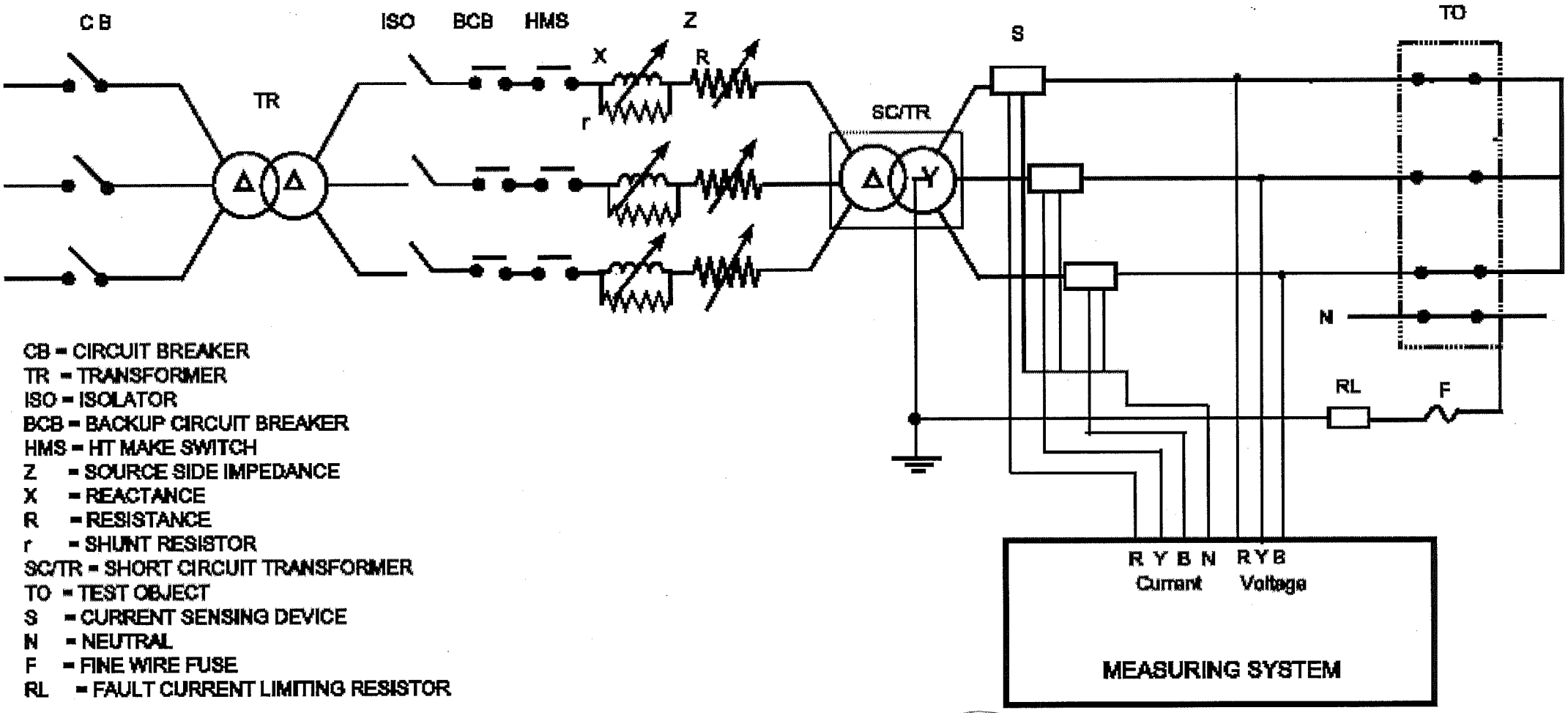

CB = CIRCUIT BREAKER
TR = TRANSFORMER
ISO = ISOLATOR
BCB = BACKUP CIRCUIT BREAKER
HMS = HT MAKE SWITCH
Z = SOURCE SIDE IMPEDANCE
X = REACTANCE
R = RESISTANCE
r = SHUNT RESISTOR
SC/TR = SHORT CIRCUIT TRANSFORMER
TO = TEST OBJECT
S = CURRENT SENSING DEVICE
N = NEUTRAL
F = FINE WIRE FUSE
RL = FAULT CURRENT LIMITING RESISTOR

Short Circuit Laboratory

ELECTRICAL RESEARCH AND DEVELOPMENT ASSOCIATION

SCHEMATIC CIRCUIT DIAGRAM

DRN	CKD BY	DATE	DRAWING No.
H. A. S.	M. B. M.	13/11/2008	OLSC/SWG/47

REPORT NO.: RI-1516-042833
DATE: 03-02-2016

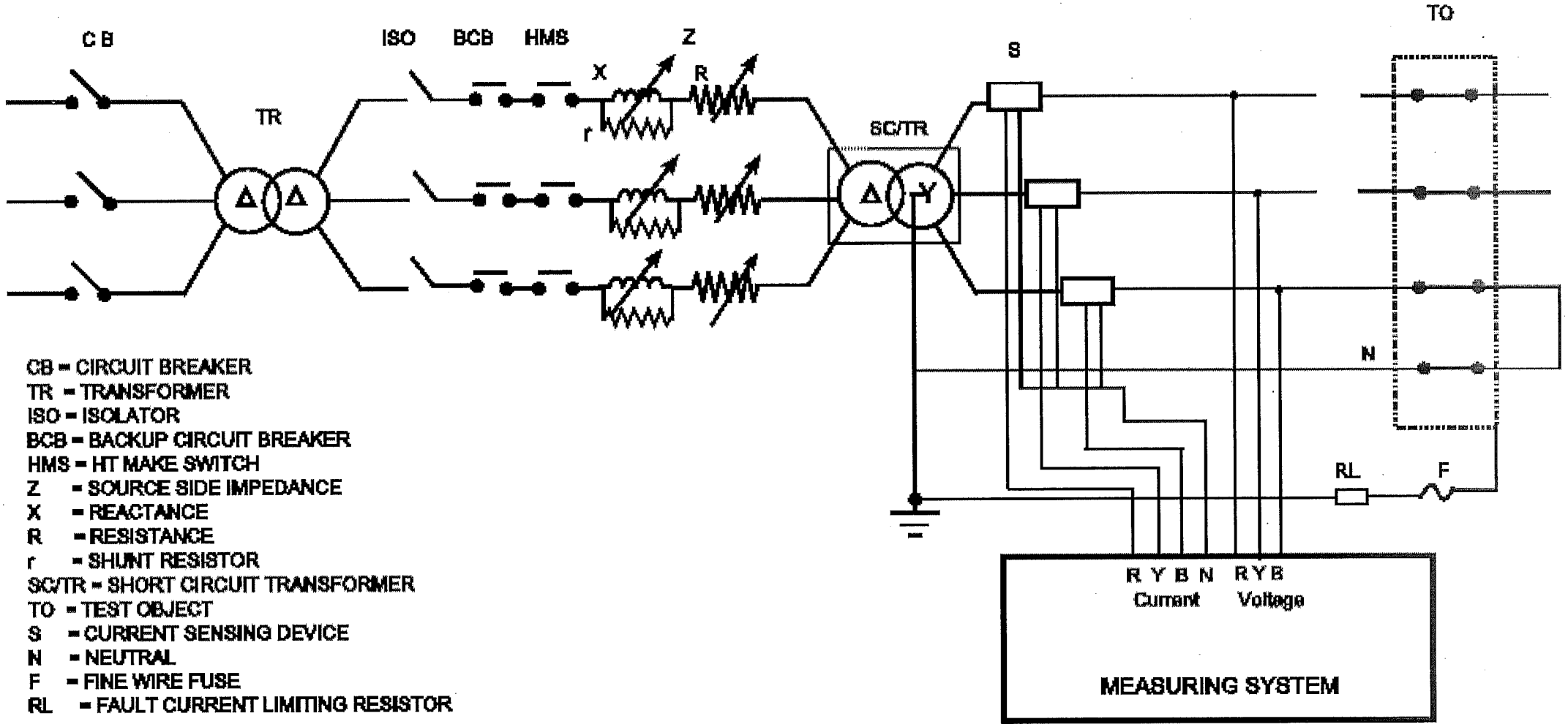

CB = CIRCUIT BREAKER
TR = TRANSFORMER
ISO = ISOLATOR
BCB = BACKUP CIRCUIT BREAKER
HMS = HT MAKE SWITCH
Z = SOURCE SIDE IMPEDANCE
X = REACTANCE
R = RESISTANCE
r = SHUNT RESISTOR
SC/TR = SHORT CIRCUIT TRANSFORMER
TO = TEST OBJECT
S = CURRENT SENSING DEVICE
N = NEUTRAL
F = FINE WIRE FUSE
RL = FAULT CURRENT LIMITING RESISTOR

Short Circuit Laboratory

S.V. Rao

ELECTRICAL RESEARCH AND DEVELOPMENT ASSOCIATION			
SCHEMATIC CIRCUIT DIAGRAM			
DRN H. A. S.	CKD BY M. B. M.	DATE 13/11/2008	DRAWING No. OLSC/SWG/49

REPORT NO.: AP-1516-042833
DATE: 03-02-2016

Test Report No. RP-1516-0h2833
Date : 03-02-2016
Product : 2200A, 690V Panel
Verified By : S.V. Patel
Verification of this drawing by ERDA is limited to relevant dimensional checks only.
Verified dimensions are marked with '*'

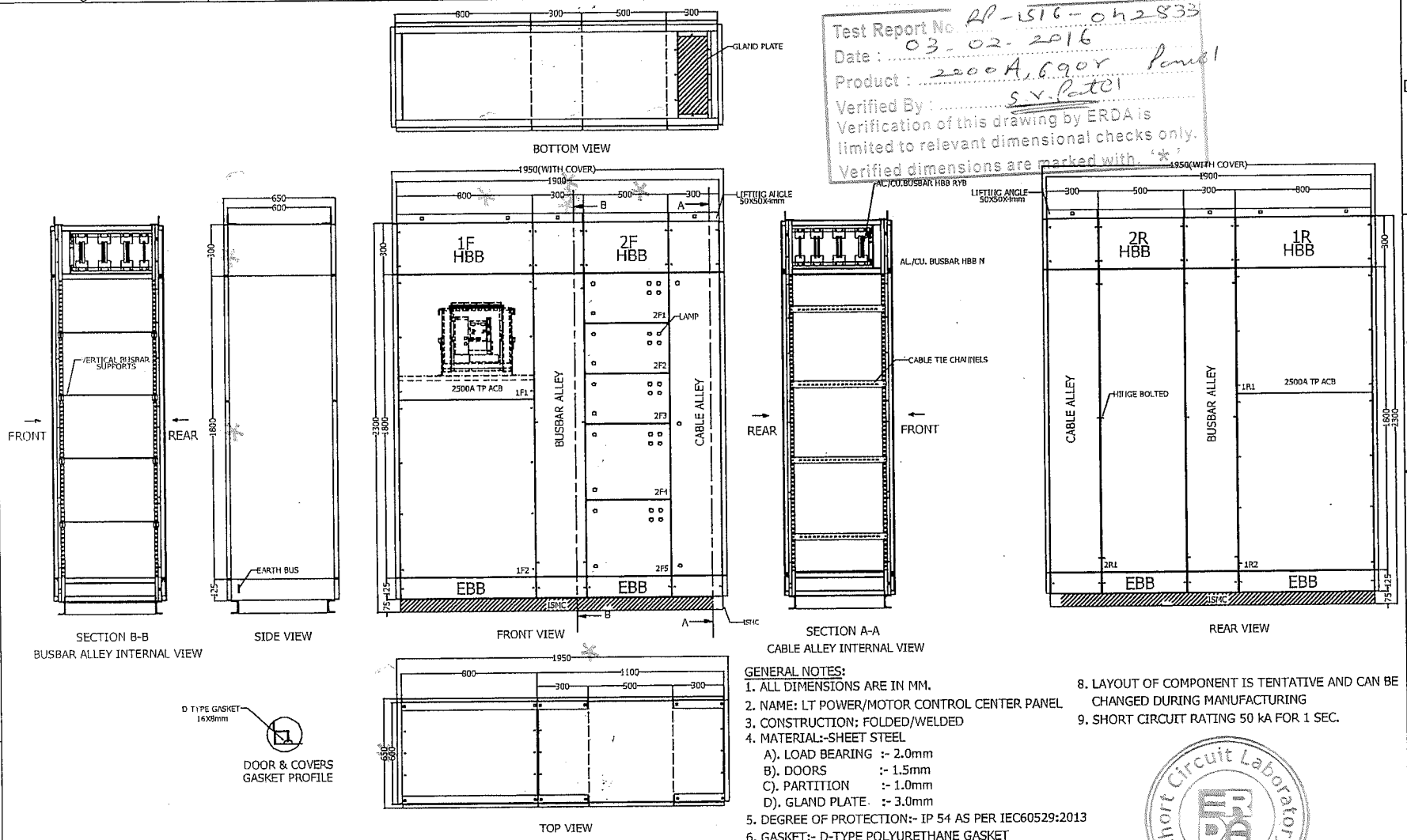

GENERAL NOTES:

1. ALL DIMENSIONS ARE IN MM.
2. NAME: LT POWER/MOTOR CONTROL CENTER PANEL
3. CONSTRUCTION: FOLDED/WELDED
4. MATERIAL:-SHEET STEEL
   A). LOAD BEARING :- 2.0mm
   B). DOORS :- 1.5mm
   C). PARTITION :- 1.0mm
   D). GLAND PLATE :- 3.0mm
5. DEGREE OF PROTECTION:- IP 54 AS PER IEC60529:2013
6. GASKET:- D-TYPE POLYURETHANE GASKET
7. SIZE OF ELECTRICAL PANEL:-1900X2300X600mm(WHD)
8. LAYOUT OF COMPONENT IS TENTATIVE AND CAN BE CHANGED DURING MANUFACTURING
9. SHORT CIRCUIT RATING 50 kA FOR 1 SEC.

Short Circuit Laboratory ERDA

PRIMA AUTOMATION (I) PVT. LTD., AHMEDABAD

	NAME	DATE	SIGN	ALL DIMENSIONS ARE IN mm	WEIGHT:- WEIGHT	A3	FIRST ANGLE					CUSTOMER REF. NO:- PRIMA_AUTOMATION
DIGN BY	VAIBHAV	25/11/15			MATERIAL:- CRCA							DWG. NO.:- ITEM008384
CHK. BY					IP:- 54	PAGE NO:- 01						DSN NO:- DSN-ITEM008384
APR. BY					QTY:-	TOTAL PAGE:- 06	REV	DATE	CHGD. BY	CHANGE		TITLE:- PCC_CUM_MCC_CONTROL_PANEL

This drawing/document is the sole property of M/S. Prima Automation (India) Pvt. Ltd. is confidential and must not copied,reproduced,communicated,transmitted by means or lent to third party,or wholly without prior permission in writing from the company and must not be used in any waydetrimental to their interest. Kindly return this copy to Prima Automation (India) Pvt. Ltd. ,Ahmedabad.

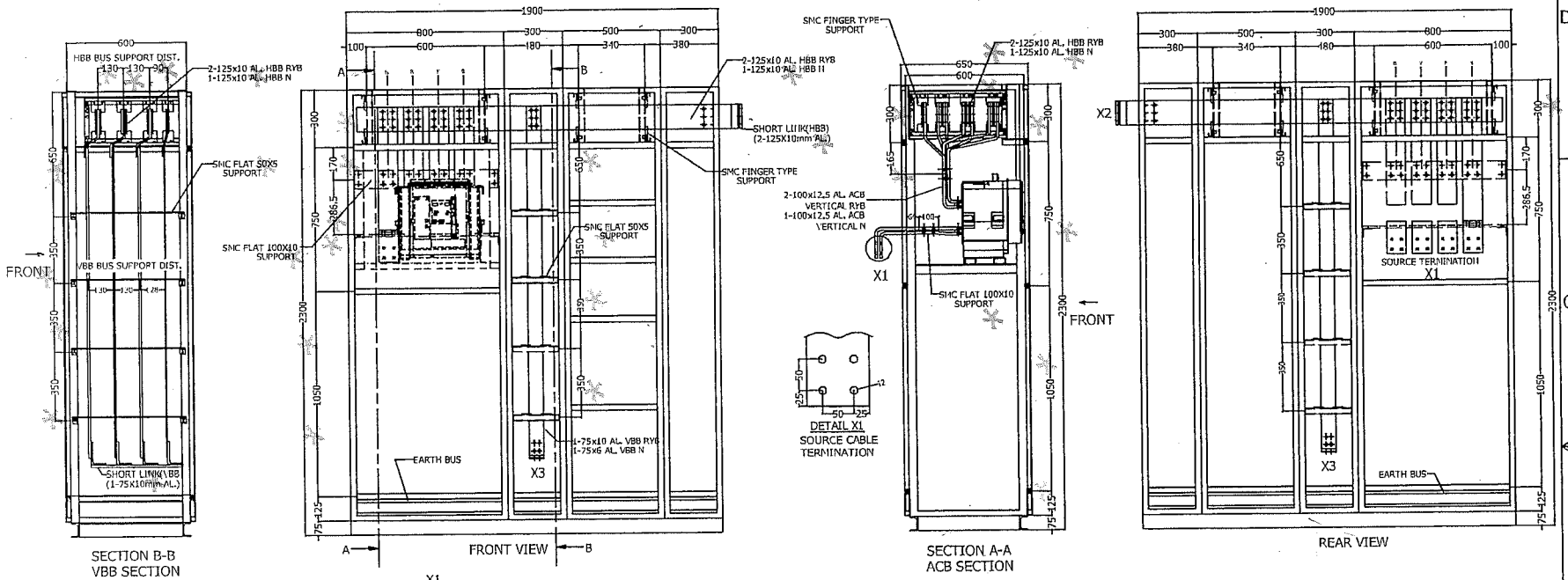

BUSBAR

A). HBB BUS:- 2-125X10mm AL. PH.
1-125X10mm AL. N.

B). VBB BUS:- 1-75X10mm AL. PH.
1-75X6mm AL. N.

C). ACB BUS:- 2-100X12.5mm AL. PH.
1-100X12.5mm AL. N.

Sr. No.	SOURCE	STAR POINT	TEST DESCRIPTION	REMARKS
1	X1	X2	3-PH. 50kA FOR 1 SEC.	HBB
2	X1	X2	B Phase and Neutral 30kA FOR 1 SEC.	
3	X1	X3	3 PH. 50kA FOR 1 SEC.	VBB
4	X1	X3	B Phase and Neutral 30kA FOR 1 SEC.	

Test Report No. PL-1516-04-833
Date : 03-02-2016
Product : 2000A, 690V, Panel
Verified By : S.V. Patel
Verification of this drawing by ERDA is limited to relevant dimensional checks only. Verified dimensions are marked with '*'

Short Circuit Laboratory ERDA

PRIMA AUTOMATION (I) PVT. LTD., AHMEDABAD

	NAME	DATE	SIGN
DIGN BY	VAIBHAV	25/11/15	
CHK. BY			
APR. BY			

ALL DIMENSIONS ARE IN mm

WEIGHT:- WEIGHT
MATERIAL:- CRCA
IP:- 54
QTY:-

A3 FIRST ANGLE
PAGE NO:- 02
TOTAL PAGE:- 06

REV	DATE	CHGD. BY	CHANGE

CUSTOMER REF. NO:- PRIMA AUTOMATION
DWG. NO.:- ITEM008384
DSN NO:- DSN-ITEM008384
TITLE:- PCC_CUM_MCC_CONTROL_PANEL

This drawing/document is the sole property of M/S. Prima Automation (India) Pvt. Ltd. is confidential and must not copied,reproduced,communicated,transmitted by means or lent to third party,or wholly without prior permission in writing from the company and must not be used in any waydetrimental to their interest. Kindly return this copy to Prima Automation (India) Pvt. Ltd. ,Ahmedabad.

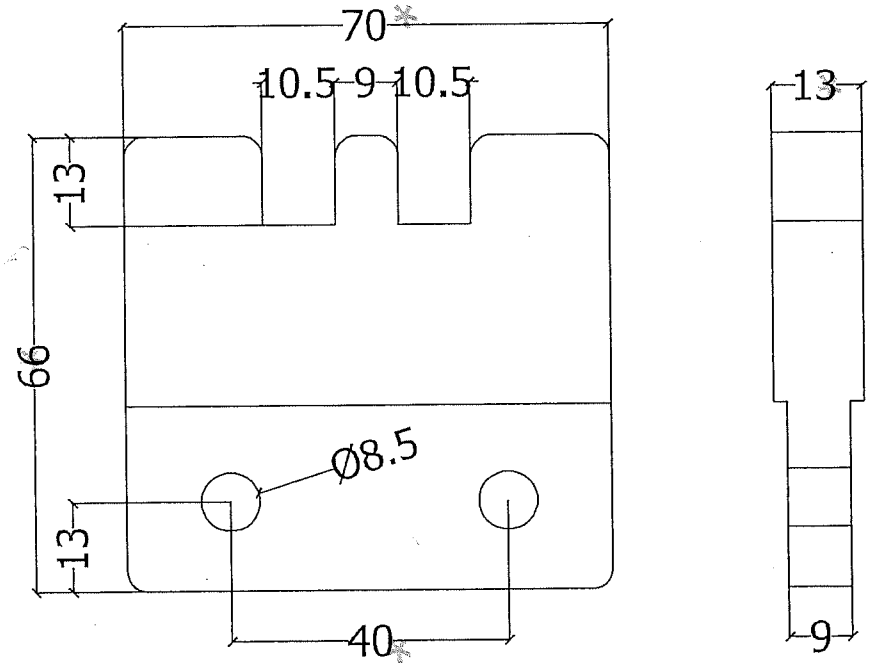

Short Circuit Laboratory
ERDA

Test Report No. RP-1516-042833
Date : 03-02-2016
Product : 2000A, 690V, Panel
Verified By : S.V. Patil
Verification of this ~~drawing by~~ ERDA is limited to relevant dimensional checks only.
Verified dimensions are marked with '*'

SMC FINGER TYPE SUPPORT
HBB BUS SUPPORT

PRIMA AUTOMATION (P) PVT. LTD., AHMEDABAD

	NAME	DATE	SIGN	ALL DIMENSIONS ARE IN mm	WEIGHT:- WEIGHT	A3	FIRST ANGLE
DIGN BY	VAIBHAV	25/11/15			MATERIAL:- CRCA		
CHK. BY					JP:- 54	PAGE NO:- 03	
APR. BY					QTY:-	TOTAL PAGE:- 06	

REV	DATE	CHGD. BY	CHANGE

CUSTOMER REF. NO:- PRIMA_AUTOMATION
DWG. NO.:- ITEM0083B4
DSN NO:- DSN-ITEM008384
TITLE:- PCC_CUM_MCC_CONTROL_PANEL

This drawing/document is the sole property of M/S. Prima Automation (India) Pvt. Ltd. Is confidential and must not copied,reproduced,communicated,transmitted by means or lent to third party,or wholly without prior permission in writing from the company and must not be used in any waydetrimental to their interest. Kindly return this copy to Prima Automation (India) Pvt. Ltd. ,Ahmedabad.

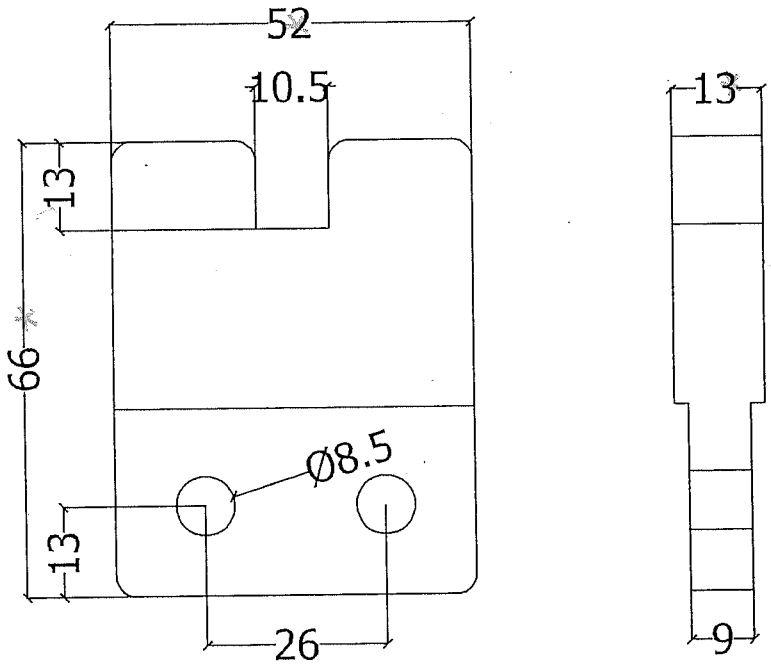

Short Circuit Laboratory

Test Report No. RP-1516-042833
Date : 03-02-2016
Product : 2000A, 690V Panel
Verified By : S.V. Patel
Verification of this drawing by ERDA is limited to relevant dimensional checks only.
Verified dimensions are marked with '*'

SMC FINGER TYPE SUPPORT
HBB BUS SUPPORT

	NAME	DATE	SIGN	ALL DIMENSIONS ARE IN mm	WEIGHT:- WEIGHT	A3	FIRST ANGLE					CUSTOMER REF. NO:- PRIMA_AUTOMATION
DIGN BY	VAIBHAV	25/11/15			MATERIAL:- CRCA							DWG. NO.:- ITEM008384
CHK. BY					IP:- 54	PAGE NO:- 04						DSN NO:- DSN-ITEM008384
APR. BY					QTY:-	TOTAL PAGE:- 06	REV	DATE	CHGD. BY	CHANGE		TITLE:- PCC_CUM_MCC_CONTROL_PANEL

PRIMA AUTOMATION (I) PVT. LTD., AHMEDABAD

This drawing/document is the sole property of M/S. Prima Automation (India) Pvt. Ltd. is confidential and must not copied,reproduced,communicated,transmitted by means or lent to third party,or wholly without prior permission in writing from the company and must not be used in any waydetrimental to their interest. Kindly return this copy to Prima Automation (India) Pvt. Ltd. ,Ahmedabad.

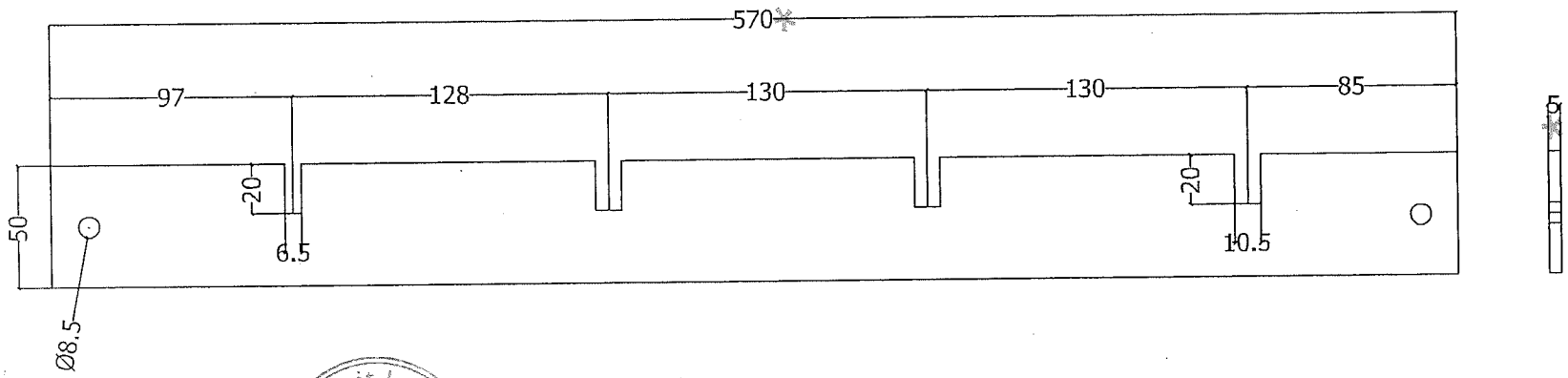

SMC FLAT TYPE SUPPORT
VBB BUS SUPPORT

Short Circuit Laboratory ERDA

Test Report No. RP-1516-042833
Date : 03-02-2016
Product : 2000A, 690V Panel
Verified By : S.V Patel
Verification of this drawing by ERDA is limited to relevant dimensional checks only.
Verified dimensions are marked with '*'.

	NAME	DATE	SIGN	ALL DIMENSIONS ARE IN mm	WEIGHT:- WEIGHT	A3	FIRST ANGLE					CUSTOMER REF. NO:- PRIMA_AUTOMATION
DIGN BY	VAIBHAV	25/11/15			MATERIAL:- CRCA							DWG. NO.:- ITEM008384
CHK. BY					IP:- 54	PAGE NO:- 05						DSN NO:- DSN-ITEM008384
APR. BY					QTY:-	TOTAL PAGE:- 06	REV	DATE	CHGD. BY	CHANGE		TITLE:- PCC_CUM_MCC_CONTROL_PANEL

PRIMA AUTOMATION (I) PVT. LTD., AHMEDABAD

This drawing/document is the sole property of M/S. Prima Automation (India) Pvt. Ltd. is confidential and must not copied,reproduced,communicated,transmitted by means or lent to third party,or wholly without prior permission in writing from the company and must not be used in any waydetrimental to their interest. Kindly return this copy to Prima Automation (India) Pvt. Ltd. ,Ahmedabad.

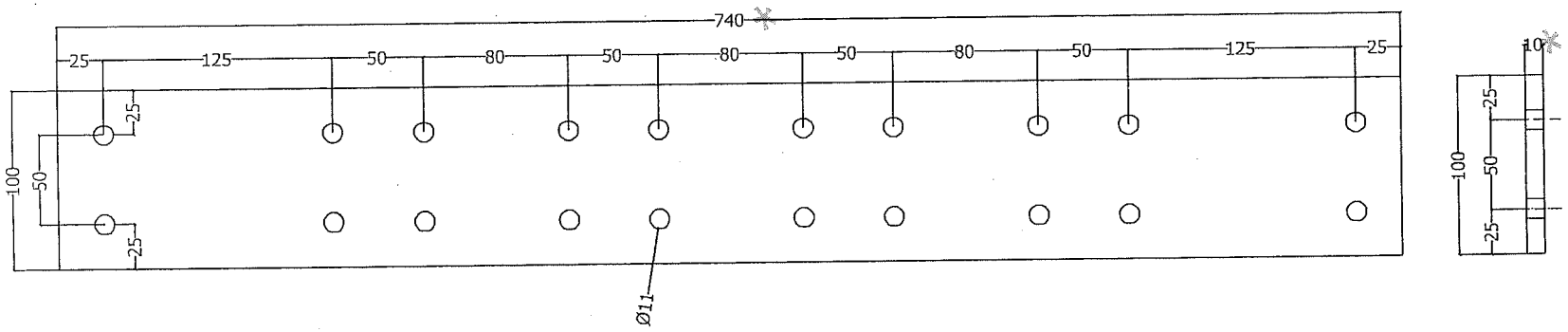

SMC FLAT TYPE SUPPORT
ACB VERTICAL BUS SUPPORT

Test Report No. Ref-1516-042833
Date : 03-02-2016
Product : 2000A, 690V, Panel
Verified By : S.V. Patel
Verification of this drawing by ERDA is limited to relevant dimensional checks only.
Verified dimensions are marked with. '*'

Short Circuit Laboratory ERDA

	NAME	DATE	SIGN	ALL DIMENSIONS ARE IN mm	WEIGHT:- WEIGHT	A3					CUSTOMER REF. NO:- PRIMA_AUTOMATION
DIGN BY	VAIBHAV	25/11/15			MATERIAL:- CRCA						DWG. NO.:- ITEM008381
CHK. BY					IP:- 54	PAGE NO:- 06					DSN NO:- DSN-ITEM008381
APR. BY					QTY:-	TOTAL PAGE:- 06	REV	DATE	CHGD. BY	CHANGE	TITLE:- PCC_CUM_MCC_CONTROL_PANEL

PRIMA AUTOMATION (I) PVT. LTD., AHMEDABAD

This drawing/document is the sole property of M/S. Prima Automation (India) Pvt. Ltd. is confidential and must not copied,reproduced,communicated,transmitted by means or lent to third party,or wholly without prior permission in writing from the company and must not be used in any waydetrimental to their interest. Kindly return this copy to Prima Automation (India) Pvt. Ltd. ,Ahmedabad.